SLIM TRADIE SM
SURFACE MOUNTED PROFILES

DARKON
THE EDGE OF LIGHT

IP22 | TRIDONIC LLE LED | ZHAGA | C-NAR | C-DEG | C-ASY | OV



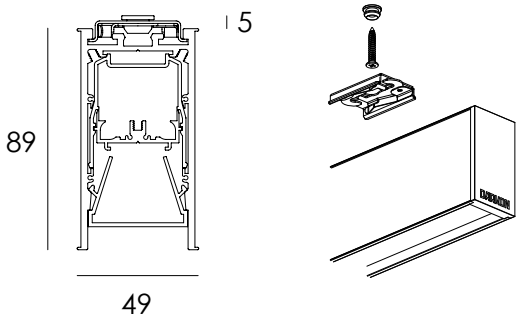

INTEGRAL DRIVER

DESIGN FEATURES

- Fast install with surface mounting bracket, no disassembly req.
- Recessed lens to help reduce glare
- Lap join milling for Light Bleed free joins
- Dot free homogeneous illumination
- Multiple fixed output options
- Multiple snap fit lens options
- Zhaga compliant
- Up to 95 exit lumens per system watt
- 90+ colour rendering, 80+ available upon request
- High colour tolerance - MacAdam 3
- L80 / F10 = 72,000 hours @ 450mA / 75°C TA
- Complies with AS/NZS 60598.2.1
- Detailed shop drawings
- Australian made
- Supplied 100% pre-built
- Snap fit gear tray with integrated driver
- Plug and play wire looms
- Sprung loaded control joints
- 10 year warranty
- Project specific labelling referencing type numbers
- Miter joints available
- Welded mitre joins eliminate light bleed
- Factory fitted "push to join" installation

LUMEN PERFORMANCE

TRIDONIC LLE24 FIXED WHITE LED

HE CRI90	200mA	828 lm p/mtr	10 W p/mtr
HE CRI90	250mA	1028 lm p/mtr	12 W p/mtr
HE CRI90	300mA	1225 lm p/mtr	14 W p/mtr
HE CRI90	350mA	1414 lm p/mtr	16 W p/mtr
HE CRI90	400mA	1601 lm p/mtr	18 W p/mtr
HE CRI90	450mA	1785 lm p/mtr	21 W p/mtr
HE CRI90	500mA	1968 lm p/mtr	23 W p/mtr
HO CRI90	200mA	1652 lm p/mtr	17 W p/mtr
HO CRI90	250mA	2039 lm p/mtr	21 W p/mtr
HO CRI90	300mA	2415 lm p/mtr	26 W p/mtr
HO CRI90	350mA	2780 lm p/mtr	30 W p/mtr
HO CRI90	400mA	3135 lm p/mtr	34 W p/mtr
HO CRI90	450mA	3473 lm p/mtr	38 W p/mtr
HO CRI90	500mA	3823 lm p/mtr	43 W p/mtr

SYSTEM WATTAGE & EXIT LUMENS
TESTED WITH OPAL V / WHITE FINISH / 4000K

OPTIONS

FINISH: White / Black / Silver / Gold / Custom
LENS: Opal V / Deglaring / Asymmetric / Narrow
LED: HE / HO / Tunable white
CURRENT: 200 / 250 / 300 / 350 / 400 / 450 / 500mA
COLOUR TEMP: 2700K / 3000K / 4000K / TW 2700-6500K
DIMMING: Non Dim / DALI / DSI / Switch Dim / Casambi

PROJECT: TYPE NO.: QTY: